Weights

Operating weight	3294 kg
Additional weight for cab with heating	121 kg
Additional weight for cab with HVAC	140 kg
Additional weight for steel tracks	96 kg
Ground pressure with rubber tracks	29.20 kPa

Engine

Make / model	Kubota / D1803-M-D1-E3B-BC-3
Fuel	Diesel
Number of cylinders	3
Displacement	1862 cm^3
Maximum NET power (ISO 9249)	23.1 kW
Maximum NET torque (ISO 9249)	107.4 Nm

Performance

Digging force, dipperstick (ISO 6015)	21000 N
Digging force, long dipperstick (ISO 6015)	18320 N
Digging force, bucket (ISO 6015)	31500 N
Drawbar pull	34132 N
Travel speed, low range	2.6 km/h
Travel speed, high range	4.7 km/h

Hydraulic System

Pump type	Single outlet variable displacement, load sensing torque limited pump
Piston pump capacity	100.80 L/min
Auxiliary flow	63.90 L/min
Auxiliary relief	206.0 bar

Slew System

Boom swing, left	77.0°
Boom swing, right	55.0°
Slew rate	8.6 RPM

Fluid Capacities

Cooling system	8.00 L
Engine lubrication plus oil filter	5.20 L
Fuel reservoir	53.10 L
Hydraulic system	39.70 L

Environmental

Noise level LpA(EU Directive 2006/42/EC)	77 dB(A)
Noise level LWA(EU Directive 2000/14/EC)	94 dB(A)
Whole body vibration (ISO 2631–1)	0.19 ms^{-2}
Hand-arm vibration (ISO 5349–1)	0.38 ms^{-2}

Standard Features

1520 mm dozer blade	Fingertip auxiliary hydraulic control
300 mm rubber tracks	Horn
Auto idle	Full fuel warning alarm
Auto shift travel	Hydraulic joystick controls
Auxiliary hydraulics with Quick Couplers	Retractable seat belt
Selectable auxiliary hydraulic flow	Suspension seat with high back
Blade float feature	TOPS/ROPS* canopy [1]
Clamp ready	Two-speed travel
Control console locks	Work lights (boom and upperstructure)
Cupholder	Warranty: 12 months, 2000 hours (whichever occurs first)
Engine/hydraulic monitor with shutdown	

1. Roll Over Protective Structure (ROPS) – Meets requirements of ISO 3471. Tip Over Protective Structure (TOPS) – Meets requirements of ISO 12117.

Working Range

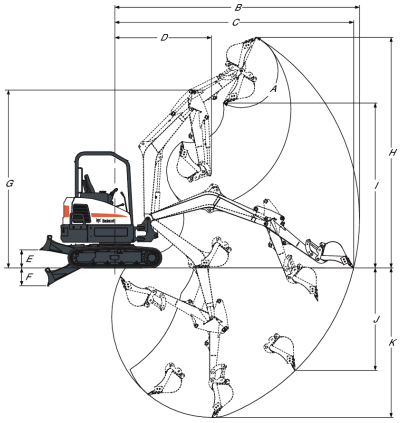

(A)	185.0°	(G)	3708.0 mm
(B)	5101.0 mm	(H)	4804.0 mm
(B)	5383.0 mm	(H*)	4985.0 mm
(C)	4980.0 mm	(I)	3437.0 mm
(C*)	5270.0 mm	(I*)	3618.0 mm
(D)	2017.0 mm	(J)	2136.0 mm
(D*)	2077.0 mm	(J)	2414.0 mm
(E)	376.0 mm	(K)	3117.0 mm
(F)	371.0 mm	(K*)	3417.0 mm

Dimensions

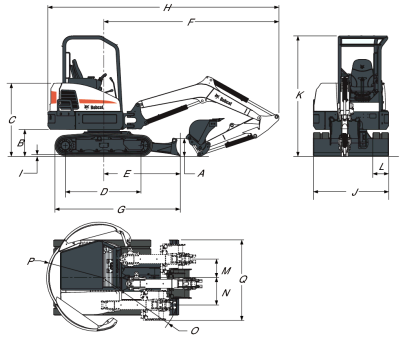

(A)	353.0 mm	(J)	1520.0 mm
(B)	537.0 mm	(K)	2429.0 mm
(C)	1473.0 mm	(L)	300.0 mm
(D)	1543.0 mm	(M)	371.0 mm
(E)	1546.0 mm	(N)	554.0 mm
(F)	3537.0 mm	(O)	1623.0 mm
(G)	1964.0 mm	(P)	1125.0 mm
(H)	4662.0 mm	(Q)	1982.0 mm
(H*)	4761.0 mm	(R)	1839.0 mm
(I)	23.0 mm		

Options

Air conditioning	Lifting chain kit
TOPS/ROPS cab with heater	Travel motion alarm
Long dipperstick	Steel tracks
2nd Auxiliary hydraulics	Beacon kit
Deluxe textile suspension seat	Left and right mirror kit
Boom safety valve with overload warning	Additional work light kit
Boom & arm safety valves with overload warning	Rubber bolt-on pads for steel tracks
AM/FM stereo radio	Special applications kit
FOGS kit (Overhead guard)	Fuel filter with transparent water separator

Specifications are subject to change without notice - Pictures of Bobcat units may show other than standard equipment